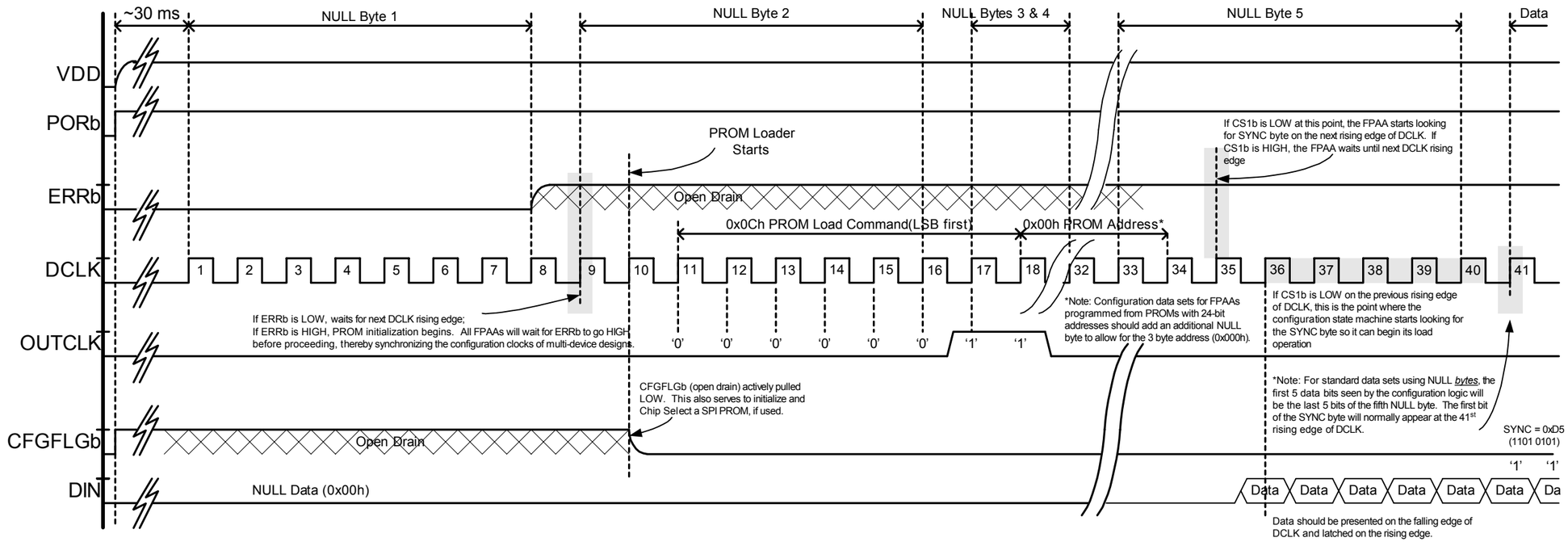

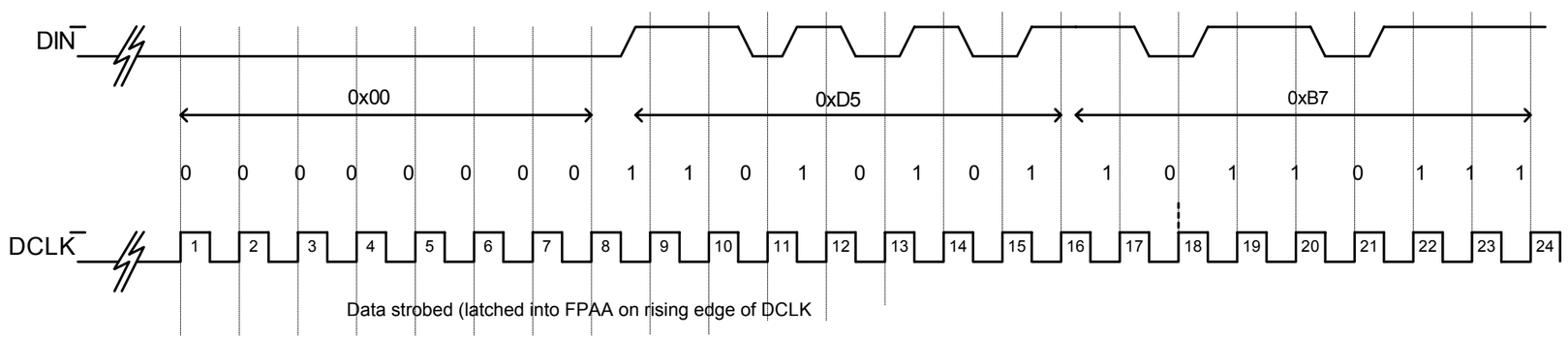

Document No. DS030101-001b